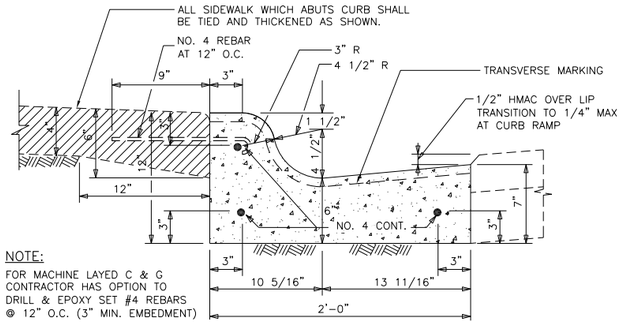

NOTE:
FOR MACHINE LAYED C & G CONTRACTOR HAS OPTION TO DRILL & EPOXY SET #4 REBARS @ 12" O.C. (3" MIN. EMBEDMENT)

TYPICAL 6" CURB & GUTTER DETAIL

NOT TO SCALE

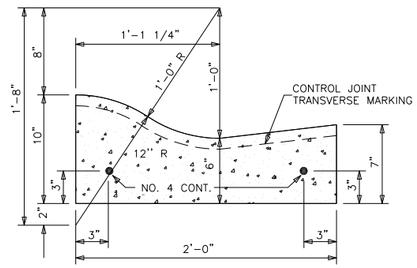

4" CURB & GUTTER DETAIL

NOT TO SCALE

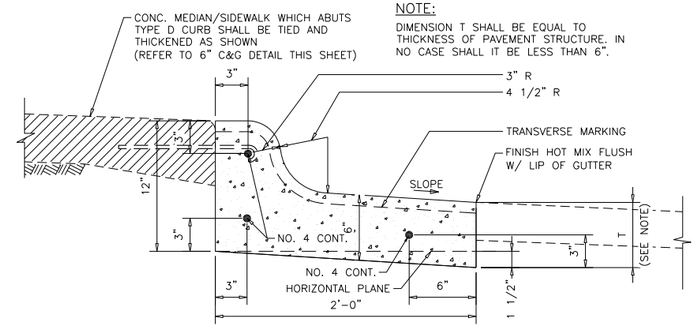

NOTE:
DIMENSION T SHALL BE EQUAL TO THICKNESS OF PAVEMENT STRUCTURE, IN NO CASE SHALL IT BE LESS THAN 6".

6" REVERSE CURB & GUTTER DETAIL

NOT TO SCALE

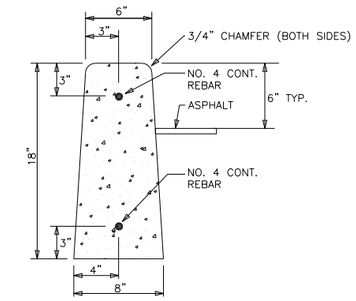

TYPE 'A' HEADER CURB DETAIL

NOT TO SCALE

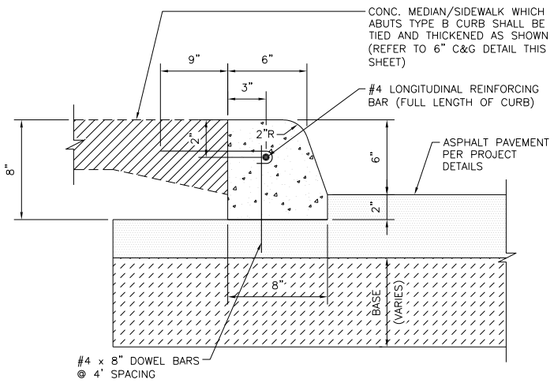

TYPE 'B' HEADER CURB DETAIL

NOT TO SCALE

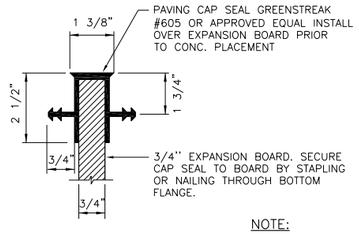

CAP SEAL DETAIL NEW CONC. TO NEW CONC.

NOT TO SCALE

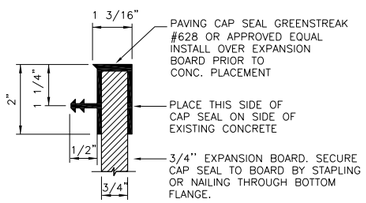

NOTE:
DO NOT TOOL CAP SEAL JOINT. INADEQUATE STANDING-EXPANSION BOARDS THAT BOW OR TWIST DURING CONCRETE PLACEMENT WILL RESULT IN IMPROPERLY ALIGNED CAP SEAL.

CAP SEAL DETAIL NEW CONC. TO EXIST. CONC.

NOT TO SCALE

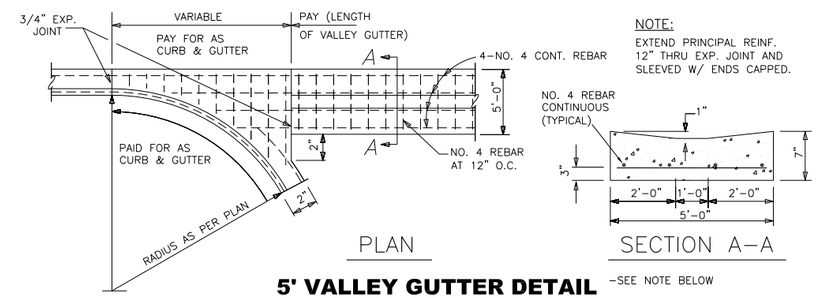

NOTE:
EXTEND PRINCIPAL REINF. 12" THRU EXP. JOINT AND SLEEVED W/ ENDS CAPPED.

5' VALLEY GUTTER DETAIL

NOT TO SCALE

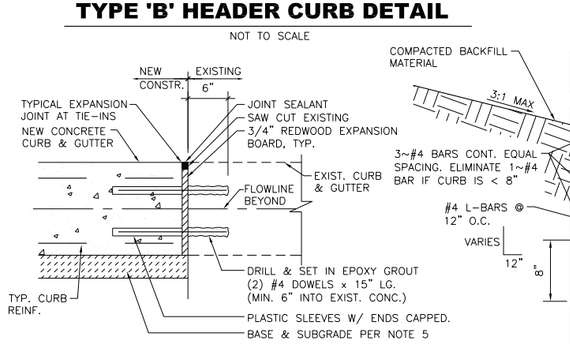

CURB AND GUTTER TIE-IN DETAIL

NOT TO SCALE

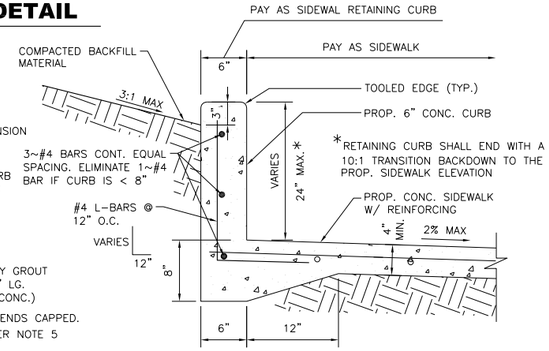

SIDEWALK RETAINING CURB DETAIL

NOT TO SCALE

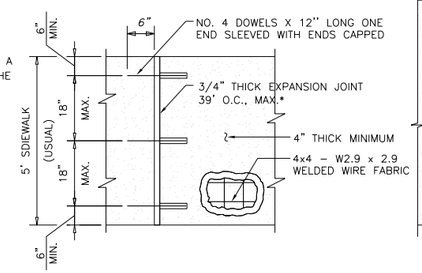

PLAN FOR SIDEWALK

NOT TO SCALE

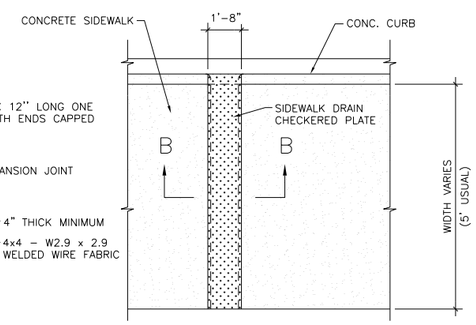

PLAN SIDEWALK DRAIN

NOT TO SCALE

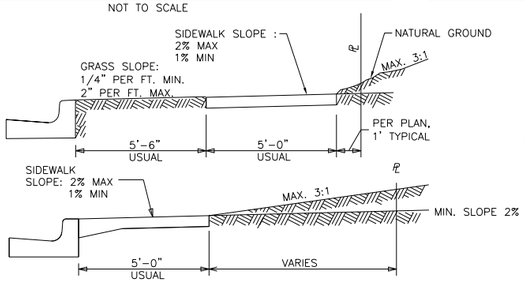

* ENGINEER MAY AUTHORIZE LESSER SLOPE ON AN INDIVIDUAL LOCATION BASIS.

SURFACE & SIDEWALK SLOPE BEHIND CURB

NOT TO SCALE

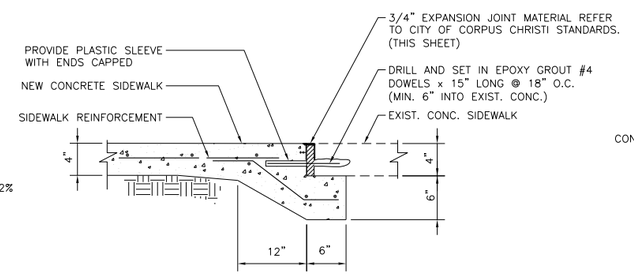

NEW TO EXISTING SIDEWALK TIE-IN DETAIL

NOT TO SCALE

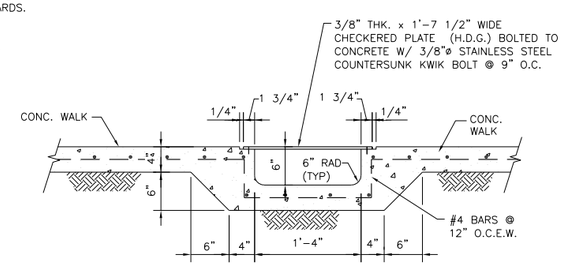

SECTION B-B

NOT TO SCALE

VALLEY GUTTER NOTE:

1. USE OF VALLEY GUTTERS ON CITY STREETS ARE NOT ALLOWED PER CITY STANDARDS. THIS DETAIL IS INCLUDED ONLY FOR ISOLATED OR TEMPORARY USE IN LOCATIONS WHERE NO OTHER DRAINAGE OPTIONS EXIST, AND SHALL ONLY BE USED WITH PRIOR APPROVAL FROM THE CITY. (MIN. 0.5% SLOPE WHEN USED)

CURB & GUTTER AND HEADER CURB NOTES:

1. ALL CONCRETE CLASS "A" 3,000 P.S.I. ALL STEEL GRADE 60 fy = 60,000 P.S.I., MIN.
2. TRANSVERSE GROOVES 1/8" WIDE BY 1/2" DEEP SHALL BE MADE IN ALL CURB & GUTTER AND HEADER CURB AT 10' O.C. (MAXIMUM).
3. 3/4" THICK EXPANSION JOINTS TO BE REDWOOD EXPANSION BOARD AND SHALL BE PROVIDED AT 39'-0" CENTERS* (MAXIMUM). REINFORCEMENT SHALL CONSIST OF THE NO. 4 DOWELS X 15" LONG SPACED AS INDICATED. THE NO. 4 DOWEL SHALL BE EXTENDED ACROSS THE JOINT 9 INCHES AND THIS END SHALL BE SLEEVED WITH ENDS CAPPED.
4. WHERE NEW CURB & GUTTER OR HEADER CURB JOINS EXISTING CURB & GUTTER, TRANSITION THE LAST 10' OF THE NEW TO MATCH THE OLD IN SHAPE.
5. BASE, SUB-BASE, AND SUBGRADE THICKNESS UNDER CONCRETE CURB AND GUTTER TO BE AS SPECIFIED IN THE PROJECT SPECIFICATIONS AND PROJECT DETAILS, PER LOADING DESIGN CONDITIONS. REFER TO THE PROJECT SPECIFIC STREET SECTION(S) AND RELATED PROJECT DETAILS SHOWN ON THE DRAWINGS. BOTH THE SUBGRADE AND THE FLEXIBLE BASE (4" MINIMUM) OR EQUIVALENT SHALL EXTEND A MINIMUM OF 1' BEYOND THE BACK OF CURB.
6. TYPICAL 6" CURB & GUTTER DETAIL IS CITY STANDARD AND SHALL BE USED IN MOST CASES. DETAILS FOR 4" CURB & GUTTER, 6" REVERSE CURB & GUTTER, AND HEADER CURBS ARE SPECIALTY ITEMS AND ARE PROVIDED FOR USE AS NEEDED TO ADDRESS PROJECT SPECIFIC CONDITIONS. USE IS SUBJECT TO CITY APPROVAL.
7. FINAL ACCEPTANCE OF THE PROJECT SHALL BE CONTINGENT UPON THE CONTRACTOR PROVIDING THE CITY WITH A CERTIFICATION LETTER, FROM THE TEXAS DEPARTMENT OF LICENSING AND REGULATION (TDLR), POLICY AND STANDARDS DIVISION, ARCHITECTURAL BARRIERS SECTION, THAT ALL ADA (AMERICANS WITH DISABILITIES ACT) HANDICAP IMPROVEMENTS, AS CONSTRUCTED, COMPLY WITH THE TEXAS ACCESSIBILITY STANDARDS (TAS) OF THE ARCHITECTURAL BARRIERS ACT ARTICLE 9102, TEXAS CIVIL STATUTES.
8. AT LEAST 1' OF THE AREA BEHIND THE CURB SHALL BE BACKFILLED AND COMPACTED (MINIMUM 95% STANDARD PROCTOR DENSITY) IN ACCORDANCE WITH THE SPECIFICATIONS AS SOON AS POSSIBLE AND NO LATER THAN 48 HOURS OF REMOVAL OF FORMS (OR SOONER IN THE EVENT OF INCLEMENT WEATHER) IN ORDER TO PROTECT THE MOISTURE OF THE PAVEMENT STRUCTURE.

SIDEWALK NOTES:

1. ALL EXPANSION JOINTS TO BE 3/4" REDWOOD EXPANSION BOARD, UNLESS OTHERWISE NOTED.
2. ALL CONCRETE CLASS "A", 3,000 psi. ALL STEEL, GRADE 60, fy = 60,000 psi.
3. CONCRETE TO RECEIVE BROOM FINISH.
4. TRANSVERSE CONTRACTION JOINTS 1/8": WIDE BY 1/2" DEEP SHALL BE CUT IN ALL SIDEWALKS AT 5'-0" INTERVALS (TYPICAL) OR THE INTERVALS SHALL BE SPACED TO MATCH THE WIDTH OF THE SIDEWALK.

THE CITY OF CORPUS CHRISTI STANDARD DETAIL SHEET IS AUTHORIZED FOR USE AS APPLICABLE TO THIS PROJECT BY THE ENGINEER OR ARCHITECT WHO'S SEAL APPEARS ON THIS SHEET. THE ENGINEER/ARCHITECT AFFIRMS THAT THE DETAILS AND NOTES ON THIS SHEET HAVE NOT BEEN ALTERED OTHER THAN TO FILL IN THE PROJECT SPECIFIC INFORMATION IN THE TITLE BLOCK

CONSULTANT'S SHEET No.

CITY of CORPUS CHRISTI
TEXAS
Department of Engineering Services

CITY OF CORPUS CHRISTI
CURB, GUTTER AND SIDEWALK
STANDARD DETAILS

REVISION NO.	DATE	BY	DESCRIPTION

SHEET ____ of ____
RECORD DRAWING NO.

CITY PROJECT # ____

REV. 10/2019